THE BLUE SHADED AREAS REFER TO CHANGES COVERING 200-5876-00 REVISION 7 THROUGH 10.

REVISION NUMBERS BESIDE BLUE SHADED AREAS REFER TO REVISION LEVELS OF THE PC BOARD ASSEMBLY.

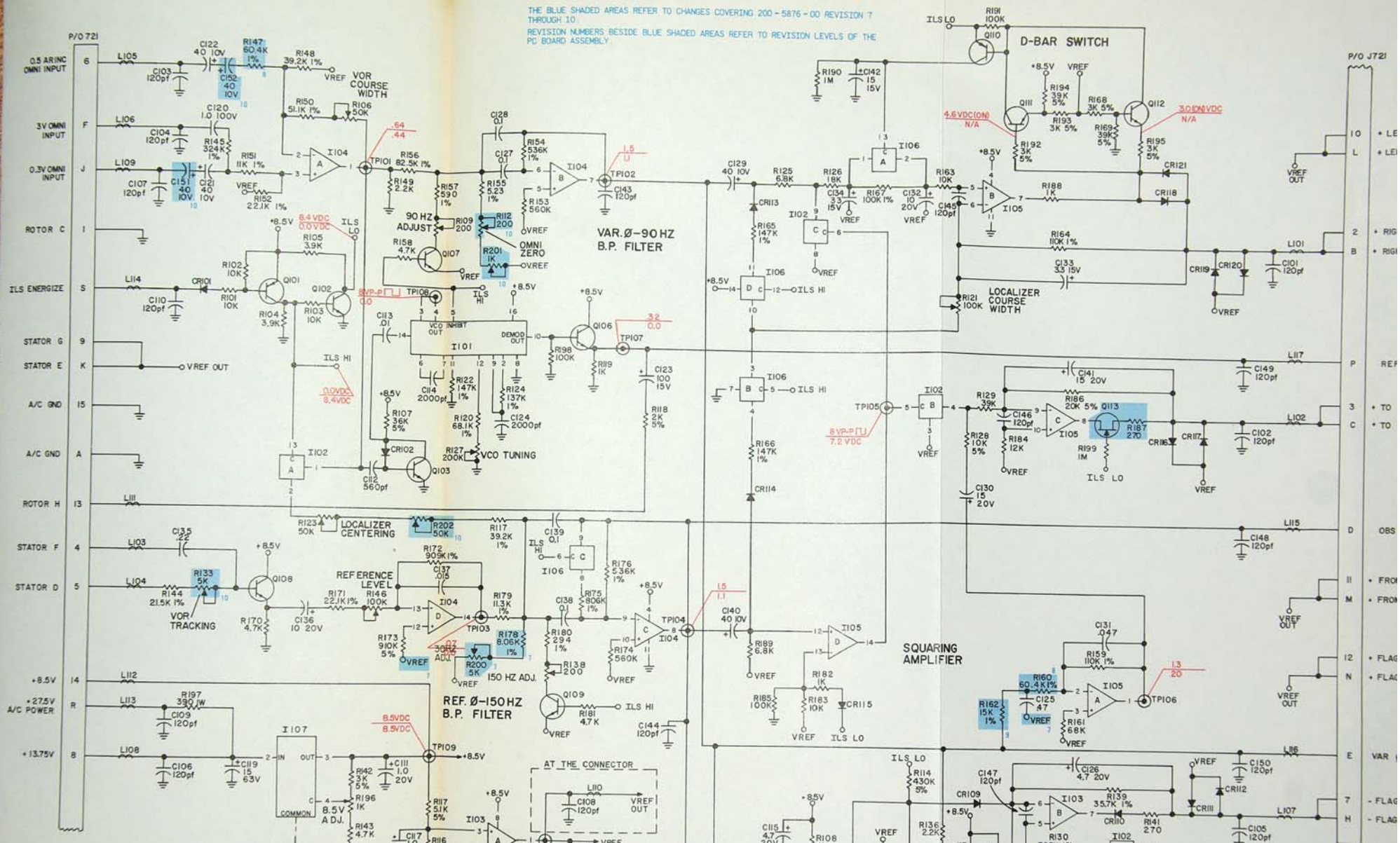


NOTES:

1) UNLESS NOTED: ALL RESISTANCE VALUES ARE IN OHMS, Q.W., 10%. ALL CAPACITANCE VALUES ARE IN MICROFARADS (uf).

2) VOLTAGE TOLERANCES: +8.5V ±.01VDC.

3) UNLESS NOTED: VOLTAGE MEASUREMENTS ARE TAKEN WITH AN RMS METER.
VOR { VOR VOLTAGE MEASUREMENTS WITH .5VRMS INPUT.
LOC { LOC VOLTAGE MEASUREMENTS WITH .33VRMS INPUT.