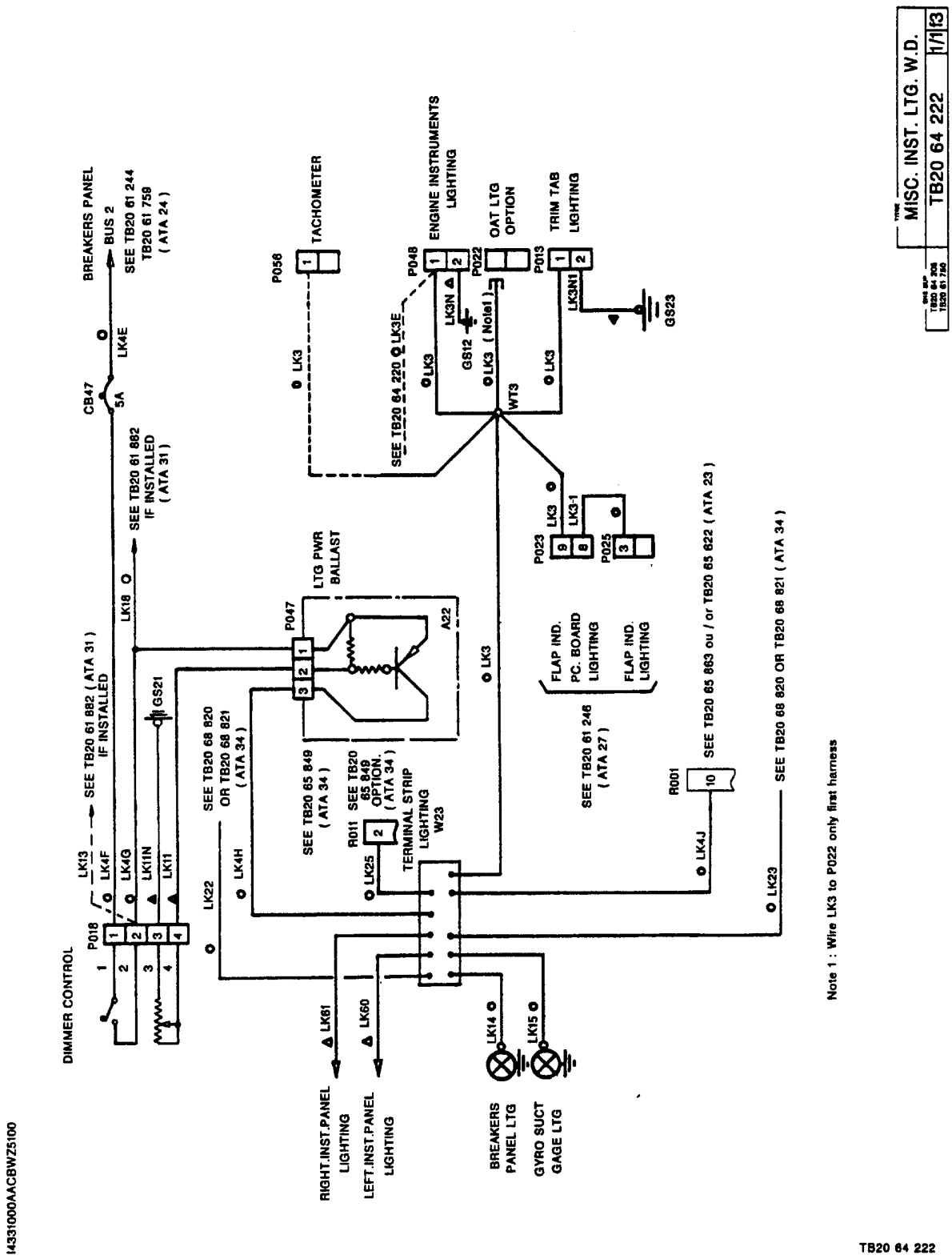

Figure II.4.15 – ECLAIRAGE INSTRUMENTS – *MISCELLANEOUS INSTRUMENTS LIGHTING*